SOLIFOS SYSTEM COMPONENTS FOR FIELD APPLICATIONS

System Components for the Integration and Protection of Tactical Field Cable Systems

BRUMIL Systems | Reels & Accessories | Surge & EMP Protection

Solifos Authorized Representative in Korea

SOLIFOS FIBER OPTIC SYSTEMS

WiT (주)위트솔루션즈 Wise Industrial Technology

02-2054-8688 • sales@witsolutions.co.kr • www.witsolutions.co.kr

BRUMIL 352 Remote Power Supply DC (for 230VAC in and 230VAC out)

The BRUMIL 352 is transporting power and data through the FO-Cu-hybrid-cable of SOLIFOS (e.g. BRUpowermil or BRUpowerfield) cable, a hybrid cable with copper conductors and optical fibers, to remote equipment over medium to long distances.

The BRUMIL 352 Hybrid Power and Optical Transmission Unit RPS (Remote Power Supply) feeds remote equipment with signal and power through a single hybrid cable. Application scope includes remote operation and mains supply of transmitter stations and other communication equipment. The RPS minimizes the effort for installations and operation and offers a very low volume and low weight solution.

Applications:

Typical RPS configuration: Ad-hoc connection between a mobile command unit ('supply side') and a remote operation unit ('remote side'), as sensors or actors (e.g. remote radar stations, UAV-base stations, remote microwave, or weapon systems)

Functionality

The RPS offers high data rate transmission and mains supply through a single hybrid cable. The hybrid cable comprises a high voltage power transmission cable and four single-mode optical fibers in a compact and lightweight construction. It terminates with a highly integrated, hybrid connector for simple mounting. This significantly reduces cabling complexity and installation time compared to traditional solutions where independent cables have to be installed for mains and data transmission. Furthermore, the RPS allows for replacement of remote power generators leading to improved reliability, reduced maintenance effort and no on site man power during operation, reduced emissions and thus improved target protection. Sophisticated provisions such as electronic transmission monitoring protect the equipment in cases of damage and guarantee safe and reliable operation. Four single-mode fiber connections provide high capacity data transmission channels, suited for setting up general purpose remote data networks, for feeding remote transmitter stations with signal and for remote operation of equipment.

Crucial features in the deployment

- High economic solution, due to smaller initial and operation costs
- Rapid availability of the current supply, simplest installation
- High mobility due to small dimensions and limited weight (installation of the cable with e.g. back-pack frame or vehicle winding frame)
- Maintenance- and pollution free operation (no fuel supply and no noise and heat emissions as with generators)
- High security against electrical accidents (all-insulated, CE certified)
- High reliability due to very durable and harsh-environment-suited design (high mechanical firmness, weather-proof, simple maintenance)
- High working reliability (constantly regulated supply voltage, permanent system monitoring device)

RPS-Master-Unit for near end and RPS-Remote-Unit for remote end are of the same size and type of case. Available as field case in protection bag or as 19"-6U-rack-mounting version.
There are special 19" boxes in plastic or metal to mount the RPS.

Box with 19"-frame 6U

Operational Principle:

The single-phase supply voltage (230 VAC) is transformed to the 1'500 VDC level and transmitted with low loss of voltage, via the specially designed FO-Cu-hybrid-cable (e.g. **BRUpowermil** or **BRUpowerfield** of **Solifos)**, installed between isolated primary and secondary transformers. Two coaxial copper conductors are for power transmission and the implemented four optical fibers enable simultaneous end-to-end signal transmissions, e.g. fast Ethernet used for telephony, data transfer, video/audio, etc. via different standard interfaces.

Power interfaces:

Power input	Power output
230 VAC	2x 230 VAC
13A	Tot. 10A

Type Identification:

BRUMIL 352 DC 230VAC

© Copyright 2021 by Solifos AG – THE INFORMATION CONTAINED IN THIS DOCUMENT IS THE SOLE PROPERTY OF SOLIFOS AG.
ANY REPRODUCTION IN PART OR AS A WHOLE WITHOUT THE PERMISSION OF SOLIFOS AG IS PROHIBITED.

Subject to changes without notice

SOLIFOS FIBER OPTIC SYSTEMS
Solifos AG
Phone +41 56 461 8000 • www.solifos.com • contact@solifos.com

Block Diagram:

Power:

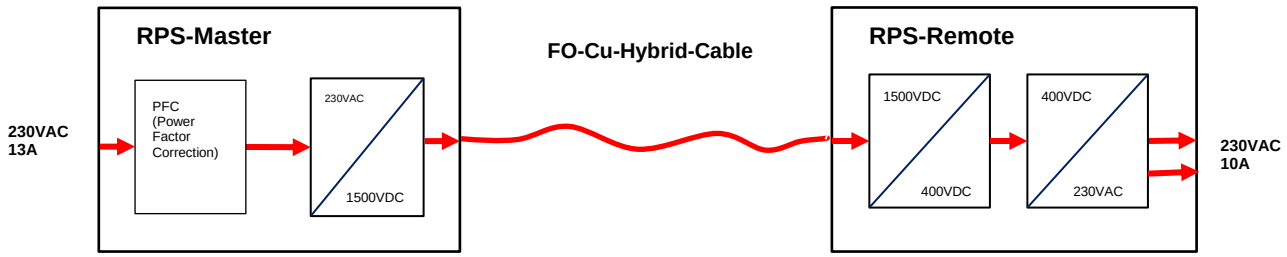

Data:

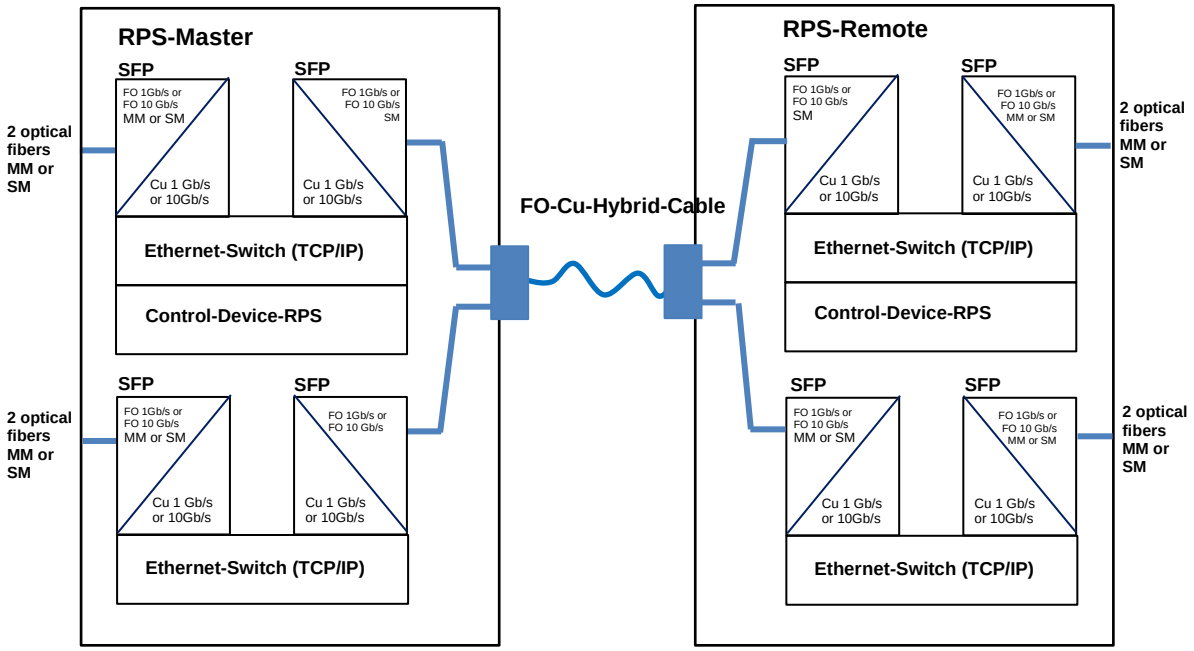

© Copyright 2021 by Solifos AG – THE INFORMATION CONTAINED IN THIS DOCUMENT IS THE SOLE PROPERTY OF SOLIFOS AG.
ANY REPRODUCTION IN PART OR AS A WHOLE WITHOUT THE PERMISSION OF SOLIFOS AG IS PROHIBITED.

Subject to changes without notice

Solifos AG
Phone +41 56 461 8000 • www.solifos.com • contact@solifos.com

Front View RPS-Master:

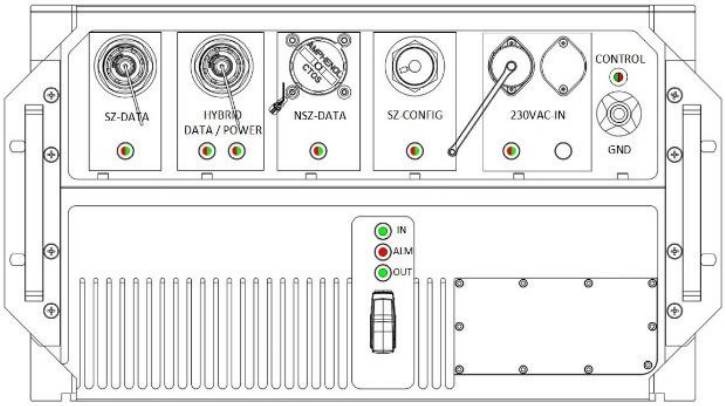

Front View RPS-Remote:

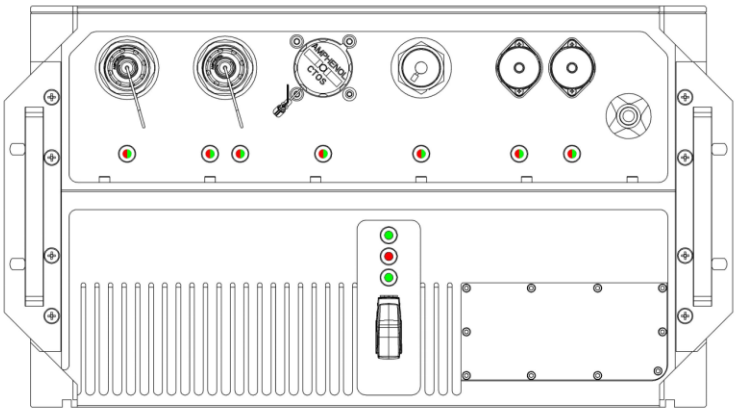

Front View in 19in-Box:

© Copyright 2021 by Solifos AG – THE INFORMATION CONTAINED IN THIS DOCUMENT IS THE SOLE PROPERTY OF SOLIFOS AG.
ANY REPRODUCTION IN PART OR AS A WHOLE WITHOUT THE PERMISSION OF SOLIFOS AG IS PROHIBITED.

Subject to changes without notice

SOLIFOS FIBER OPTIC SYSTEMS
Solifos AG
Phone +41 56 461 8000 • www.solifos.com • contact@solifos.com

Technical data:

Mechanical data		**User Interface**	
Size (WxHxD)/mm without textile bag, metal or plastic box	483x267x520	Mains switch	On/Off
Weight approx. no outer case	33kg	FO: CTOS / HMA	10 Gb/s or 1 Gb/s
Power supply		**Status indication:** Each Interface and function will have a clear status indication: LED green = o.k. LED red = alarm	LEDs for: • CTOS: data (green blinking) • CTOS: link green or red • HMA: data (green blinking) • HMA: link green or red • Hybrid: data (green blinking) • Hybrid: link green or red • Hybrid: power green or red • Ethernet: data (green blinking) • Ethernet: link green or red • 230VAC: voltage green or red • Main switch: green or off
Input voltage	230VAC/10A/50Hz ± 10%	**Protection**	
Output voltage	230VAC/50Hz ± 3% (regulated)	Isolation	3.5 kV
Max. output power	2.3 kVA permanent	FO Digital signal lines	Optical coupling of digital signal lines
Max. transmission length	1.5 km	Electrical data	SPD (LEMP)
Efficiency (RPS-Master, 1.5km hybrid cable and RPS-Remote)	80%	1500VDC / 230VAC	SPD (LEMP)
Environment		Power Transmission	Mains power transmission galvanically isolated and monitored with protective signal
Operation temperature	-30..+50°C MIL-STD-810, 502.4, procedure II, 501.4, procedure II	Overload protection	Electronic protection circuit
Storage temperature	-40..+70°C MIL-STD-810, 502.4, procedure I, 501.4, procedure I	**Approvals**	
Relative humidity (closed interfaces)	95% MIL-STD-810E, 507.3, procedure I, cycle 3	EMC emissions	MIL-STD 461E
Waterproof	IP65	EMC immunity	MIL-STD 461E, IEC 61000-4-2, IEC 61000-4-4, IEC 61000-6-2
Shock (device in transport case)	MIL-STD-810F, method 516.5, procedure I, impulse (20g, 11ms, saw tooth	Transport	
Vibration (device in transport case)	MIL-STD-810F, method 514.5 (1.04g RMS according to 514.5C-1, 5 - 500 Hz)	Case	Shock absorbing carrying case
External I/O		**FO-Cu-Hybrid cable:** BRUpowermil, BRUpowerfield or BRUpowerfield slim with hybrid connector Type A **Options** • HEMP-, NEMP-, IEMI-protection • Customer specific variants are available	
Optical connectors	HMA (MIL-DTL-83526/21) 2F or 4F, MM or SM CTOS (Amphenol) 2F MM or 4F MM		
Hybrid connector	1 x pair copper for 1500VDC, 4 x single-mode FO (1310nm), RPS to RPS		
Electrical Ethernet	100/1000BaseT M38999		
230VAC In	Binder plug, series 693, 7pol pin		
230VAC Out	Binder plug, series 693, 7pol socket		

© Copyright 2021 by Solifos AG – THE INFORMATION CONTAINED IN THIS DOCUMENT IS THE SOLE PROPERTY OF SOLIFOS AG.
ANY REPRODUCTION IN PART OR AS A WHOLE WITHOUT THE PERMISSION OF SOLIFOS AG IS PROHIBITED.

Subject to changes without notice

SOLIFOS FIBER OPTIC SYSTEMS
Solifos AG
Phone +41 56 461 8000 • www.solifos.com • contact@solifos.com

Norms and Standards:

Safety measures:

- Startup procedure with safe voltage limited to 100 VDC
- Integrated current leakage measurement for the master to slave power interface
- integrated open circuit protection for master to slave power interface
- Isolation monitoring
- No touchable electrical parts along the high voltage link
- GND pole

Environmental specs

Temperature*:	MIL-STD-810H (2019), Method 501 (high) and Method 502 (low) • Operating -30°C to +50°C • Non-operating -40°C to +70°C
Altitude*:	MIL-STD-810H (2019), Method 500 (altitude) • Operating 3500 m.a.s.l. • Non-Operating 4500 m.a.s.l.
Humidity*:	MIL-STD810H Natural (Operating) Cycle B1…B3, Induced (Storage and Transit) Cycle B1…B3, humidity up to 95%, 10 cycles. • Operating, condensing, up to 50°C up to 95% • Non-Operating, condensing, up to 70ºC up to 95%
Mechanical Shock*:	MIL-STD-810H Method 516.8 Procedure I • 18 shocks, 3 in both directions of the three orthogonal axes. Each shock shall have time duration of 6-9 milliseconds, half-sine wave shape, with an acceleration peak value of 20g IAW
Drop*:	MIL-STD-810H Method 516.8 Procedure IV • Single drop on critical axis, 0.5 m high over sand
Fungus*:	MIL-STD-810H • Fungus inert material only
Transportation*:	MIL-STD810H Method 514.8 Category 4 Truck/Trailer Secured Cargo
Splash and heavy rain*:	MIL-STD-108E (splash proof) and rain of 100mm/h and wind of 18 m/s
Water and Dust*:	IP65 EN60529 (Option: IP67 is possible)
Sand and Dust*:	MIL-STD-810F Method 510.4.with 10.6 gr/m^3 dust and 1.1gr/m^3
Acceleration*:	• Vertical (Y) direction: 2.5g • Transversal (X) direction: 1.0g • Longitudinal (Z) direction: 3.0g
Contamination (Fluid Susceptibility)*:	• Water based automotive cleaning sprays • Fuels, diesel (gasoil) and gasoline • Automotive Hydraulic Fluids • Oils automotive. • Coolants Glycol derivatives
Solar Radiation*:	MIL-STD 210E (for Switzerland Region) 1‘120 Watt/m^2
Icing, freezing rain, glaze ice*:	ice load of 20mm Mil-STD-810E, Meth. 521.1, Proc. I
Snow load*:	350 Kg/m2

© Copyright 2021 by Solifos AG – THE INFORMATION CONTAINED IN THIS DOCUMENT IS THE SOLE PROPERTY OF SOLIFOS AG.
ANY REPRODUCTION IN PART OR AS A WHOLE WITHOUT THE PERMISSION OF SOLIFOS AG IS PROHIBITED.

Subject to changes without notice

SOLIFOS FIBER OPTIC SYSTEMS
Solifos AG
Phone +41 56 461 8000 • www.solifos.com • contact@solifos.com

EMC and lightning protection	
EMC as required by European EMC-Directive (CE-mark) including conformity declaration*:	• EN 61000-3-2; 3-3+A1; 4-2; 4-3 +A1 + A2; 4-4; 4-5; 4-6; 4-8; 4-11 • EN 55011:2016 + A11:2020 Tabelle 2 + 6 • AECTP NCE 04; NCE05; NCS01; NCS02; NCS07; NCS08; NCS09; NCS12.2; NRE01; NRE02; NRS01; NRS02; NCE02 • VG 96903-76/EN 62305-4
All the electrical ports are protected against the effects of lightning (LEMP and Surge)*	• armasuisse regulation 60042 Version 02 • The ground connection is possible with the official M8 Grounding Screw of the Swiss Forces.
Safety requirements	• Electrical Safety as per European Low-Voltage Directive, including conformity declaration (2014/35/EU) • Electrical Safety requirements as per armasuisse Regulation 60035 Version 05 “Regulations for electrical low-voltage products within the army's field of application” • IEC 62368-1:2018, Audio/video, information and communication technology equipment - Part 1: Safety requirements • Operating altitude: 3500 m.a.s.l

* All certifications and approvals are pending

© Copyright 2021 by Solifos AG – THE INFORMATION CONTAINED IN THIS DOCUMENT IS THE SOLE PROPERTY OF SOLIFOS AG.
ANY REPRODUCTION IN PART OR AS A WHOLE WITHOUT THE PERMISSION OF SOLIFOS AG IS PROHIBITED.

Subject to changes without notice

Solifos AG
Phone +41 56 461 8000 • www.solifos.com • contact@solifos.com

BRUMIL 450 – Data- and Power-Distributor

The BRUMIL 450 is for data and power connection. It includes a ruggedized IP65 construction and connectors, The connection to the server is based on a tactical FO-cable (e.g. BRUmil, BRUfield, BRUtouhg…) or an FO-Cu-hybrid-cable (e.g. BRUpowermil or BRUpowerfield)

Application:

• Distribution of data and power. (Ethernet 100BaseT and 230VAC)
• Compatible to networking components, like the optical media converter and the remote power supply• Can be adapted to COTS based LAN devices easily.

Construction:

Connection bar:

• 6-8 RJ-45 Ethernet connections
• 2 sockets 230 VAC
• Internal 10/100/1000BaseT switch with 1000BaseFX FO-connection to the server.
• Hybrid connecting cable for data and power
• Over current protection
• LED-indication for data traffic and power presence.
• Receptacle for daisy chaining of more than one BRUMIL450

Hybrid FO+Cu-Connecting Cable BRUpowermil or BRUpowerfield

• 4 fiber optic channels, either single or multimode for FO-Ethernet.
• 2 power conductors (1.6mm^2 resp. 1.0mm^2)
• Connector ruggedized, fully sealed hermaphroditic construction

Special Options (tailor made):

• PoIP for 10/100BaseT
• PoIP for 10/100/1000BaseT
• WAP-Module for wireless extension
• SIP-VoIP-manager (soft PBX on embedded PC).
• Connections for analog telephone to VoIP (e.g. 2 FXS and 2 FXO connections)
• Connections for ISDN telephone to VoIP (e.g. 2 FXS and 2 FXO connections)

Data- Power-Distributor

Technical Data:

Electrical Power:

• Voltage	230 VAC
• Current FO+Cu-Cable	6A (short term 13 A)

Data at FO+Cu-Connecting Cable:

• 4 Fibers	9/125 single mode, 1310 or 1550 nm
• e.g. 1000BaseLX	

Ethernet connections:

• 6-8x RJ-45 10/100/1000BaseT

Temperature range:

• Operation:	-40º...+70º C MIL-STD-810F-501.II
• Storage:	-60º...+85º C MIL-STD-810F-502.I

Environmental Conditions:

• Immersion prot.	IP65 closed connector caps or connectors inserted.

Cu-Hybrid-Connector

Hybrid Connector for optical- and power connection

© Copyright 2018 by BSolifos AG – THE INFORMATION CONTAINED IN THIS DOCUMENT IS THE SOLE PROPERTY OF BRUGG KABEL AG.
ANY REPRODUCTION IN PART OR AS A WHOLE WITHOUT THE PERMISSION OF BRUGG KABEL AG IS PROHIBITED.

Subject to changes without notice

SOLIFOS FIBER OPTIC SYSTEMS
Solifos AG
Phone +41 56 461 8000 • www.solifos.com • contact@solifos.com

BRUMIL 451 OMC – Optical Media Converter

The Optical Media Converter is a media converter for easy conversion from fiber based to copper based Ethernet and opposite. A hardened device designed for indoor and outdoor applications in rough environments. Two media converters can expand an Ethernet link over long distances

Applications:

- Temporary long distance Ethernet-data-links e.g. between military checkpoints, command posts and headquarters in harsh environmental conditions
- Expanding an Ethernet connection over long distance with tactical fiber optical cable
- For tactical fiber-optic cable e.g. with military lens connectors.
- For indoor and outdoor use
- Easy integration & operation

Description:

- The OMC is equipped to cover FO/electrical-media-converter function for TCP/IP protocols. The function is used to extend the data transmission of an Ethernet channel by fiber optical lines. The OMC is especially designed for the use in harsh environmental conditions. At the front panel there are MIL-grade connectors available to interface with tactical optical-fiber-cable, copper-data-cable and power connections (AC or DC or both).
- The standard configuration includes one HMA compatible optical interface and one electrical MIL-grade-RJ-45-interface (10/100/1000BaseT) for bit rates up to 1 Gb/s, with automatic sensing. Crossed or uncrossed wire cables are detected automatically by the OMC. The FO-interface is fixed to 1Gb/s bit rate
- The maximal cable length at the optical single mode interfaces is 10km (depending on the number of connectors in the line) and 100m at the Cu-data-interfaces

Technical data:

Power supply:
AC power: 100 … 240 VAC / 50…60 Hz +/- 10%
DC power: 12 … 45 VDC on (optional)
DC and AC power (one interface for both, DC or AC is automatically selected by the connecting cable type). This is and optional feature.
Power consumption: approx. 10W
Power cord with special ruggedized connector

Connections:

Ethernet port RJ-45
Port with auto-sensing 10/100/1000 BaseT
Fiber port 1000 Base-LX, single mode, 1310 nm
Fiber port 1000 Base-FX multi mode 1300 nm (option).
Expanded beam bulkhead (HMA compatible) with two lenses for two optical fibers.
A1=Rx; B1=Tx

Textile bag:

The textile bag is containing the media converter box to protect it during transportation and operation against shock and the effects of sun exposure. Side bags are made for grounding tools and adapting cables.

Environmental conditions:

Operation:	-37 … +49º C
Storage:	-40 … +85º C
Humidity:	5 … 95% relative humidity, non-condensing
Immersion Protection:	IP 54 (standard)
Upgradeable up to:	IP 67 (optional)

Dimensions:

Width x High x Depth:	220 x 110 x 210 mm
(AC and DC option)	220 x 110 x 250 mm
Weight:	3.0 kg

Options:

The OMC can be customized according to specific requirements and customer's needs, e.g. for multimode cables or for other fiber-optic connectors.
A special version would be possible as repeater with two fiber-optic interfaces and two copper-data interfaces.

and further accessories. A customized textile bag may contain customer specific accessories.

Extended Temperature range: -40…+60°C

Supported Standards:

IEEE 802.3 for 10BaseT

IEEE 802.3u for 100BaseT(X) and 100BaseFX

IEEE 802.3ab for 1000BaseT(X)

IEEE 802.3z for 1000BaseSX/LX/LHX/ZX/EZX

IEEE 802.3x for Flow Control

© Copyright 2018 by BSolifos AG – THE INFORMATION CONTAINED IN THIS DOCUMENT IS THE SOLE PROPERTY OF BRUGG KABEL AG.
ANY REPRODUCTION IN PART OR AS A WHOLE WITHOUT THE PERMISSION OF BRUGG KABEL AG IS PROHIBITED.

Subject to changes without notice

SOLIFOS FIBER OPTIC SYSTEMS
Solifos AG
Phone +41 56 461 8000 • www.solifos.com • contact@solifos.com

Motorized winding frame with NATO-reel including rotary-joint

The easy perfect system for deployment of medium to long cable lengths. Operational and in service communication during deployment.

Applications:

- Tactical connecting cable ready to use
- Fast cable deployment in various landscapes from vehicles
- Increased max. cable length compared to the hand reels or back-pack reels
- Use of full or partial cable length
- Outdoors and harsh environment
- **Suitable for systems that need to be operational during deployment of the cable.**

Description:

- Winding frame in aluminum, colored green for mounting on a vehicle, excluding reel, including
  - Motor drive for easy deployment with adjustable speed control.
  - NATO-reel with built in rotary-joint to allow for connectivity while the reel is rotating.
- The reels are scalable for different cable types, length and size:
  - Various flange diameters
  - Various rotary-joints
  - Various power supply voltages
  - Various motor drives
- The NATO-reel with rotary-joint and the motor drive are fully compatible to the existing NATO-reel product line.

Material:

- Winding frame in aluminum, colored green
- Reels in aluminum, colored green
- Various cable types including FO-field cables and FO-Cu-hybrid cables.
- Plug at the long end, receptacle at the short end. Preassembling with military lens- or butt joint connectors.

Color:

- Green, similar to RAL 6031

Accessories offered:

- Deployment aids, like wedge clamps, masts etc.
- Training for deployment, repair and cable testing in the field
- Solution engineering and system design
- Tactical Cable Measuring Case to localize exactly the defective spot
- Tactical Cable Repair Kit for fusion splice in the workshop or the Field Repair Kit for mechanical splice technique

Standards:
- Vibration MIL-STD-167-1
- Mechanical shock: MIL-STD-810F

NATO-Reel with rotary-joint and winding frame with motor drive and control box..

NATO-reel with built in receptacle and rotary-joint.

Dimensions Motorized Winding Frame with 380mm NATO-Reel and 600m BRUmil tactical cable:

	Width mm	Height mm	Depth mm	Weight kg
Total	547	480	436	36.0

Power supply:

Type	Average consumption W	Max. consumption W
24VDC	40	250

Optical signal attenuation including lens connectors and rotary-joint:

Type	Typical insertion loss dB	Max. insertion loss dB
BRUmil 600m 4F SM	4.4 dB	7.5 dB

Environmental conditions:

Ingress protection IP	Temperature range operation	Temperature range storage
IP65	-20°C ... +65°C	-25°C … +75°C

© Copyright 2018 by BSolifos AG – THE INFORMATION CONTAINED IN THIS DOCUMENT IS THE SOLE PROPERTY OF BRUGG KABEL AG.
ANY REPRODUCTION IN PART OR AS A WHOLE WITHOUT THE PERMISSION OF BRUGG KABEL AG IS PROHIBITED.

Subject to changes without notice

SOLIFOS FIBER OPTIC SYSTEMS
Solifos AG
Phone +41 56 461 8000 • www.solifos.com • contact@solifos.com

BRUMIL 110 – Motorized-XXL-Winding-Frame

For long distance applications, the modular Motorized-XXL Winding-Frame makes the deployment of tactical fiber optic cables simple. It is a hardened device designed for outdoor, in rough environments as well as for indoor workshops.

Applications:

- Temporary long distance tactical FO-cables between military checkpoints, command posts and head quarters or between control centers, sensors and actors, in harsh environmental conditions
- For tactical fiber optic cable e.g. with military lens connectors.
- For indoor and outdoor use, on a vehicle or in a workshop
- Easy integration and operation

Description:

- The Motorized-XXL-Winding-Frame is specially designed for deployment of very long tactical FO communication lines.
- The Winding-Frame can be mounted on a vehicle e.g. on the back of a truck or off-road-vehicle for the deployment in the field.
- The Motorized-XXL-Winding-Frame is especially designed for the use in harsh environmental conditions.
- There are 230VAC power supply connections to drive the motor directly by an AC mains connection or an additional DC-to-AC-inverter is connected to the onboard 24VDC power of the vehicle to provide the required AC-power to the motor drive.
- The standard configuration includes the following modular components:
  - XXL-Winding-Frame P/N 163181
  - XXL-Reel (800mm) P/N 163732
  - XXL-Motor-Drive P/N 200166
  - DC-to-AC-Inverter (24VDC to 230VAC)
- Each component can be ordered seperately
- The maximal cable length is 10km (e.g. BRUmil or BRUfield cable 3.8mm)

Technical data:

Power supply:
- AC power: 230 VAC +/- 10% / 50Hz
- DC power: 22 … 29.5 VDC
- Max. power consumption: 800W
- Typical peak consumption: 400W
- Typical average consumption 150 W (deployment)

Power cords with special ruggedized connectors (IP68)

Connections:

- 24VDC (APP SPEC PakTM High Power Inline Receptacle)
- 230VAC (Binder 693 Series 3P+PE)

Control functions:

- Joystick switch: forwards
- Joystick switch: backwards
- Potentiometer: speed
- Emergency stop button

Environmental conditions:

Operation:	-10 … +55º C
Storage:	-40 … +70º C
Humidity:	5 … 95% relative humidity, non-condensing
Immersion Protection:	IP 65 (standard)

Dimensions:

Width x Height x Depth with motor:	1250 x 950x 810mm
Width x Height x Depth w/o motor:	740 x 950 x 810mm
Weight Motor-Drive:	approx. 25 kg
Weight Winding-Frame:	approx. 22 kg
Weight XXL-800-reel:	approx. 39 kg

Options:

The Motorized-XXL-Winding-Frame can be customized according to specific requirements and customer's needs, e.g. different size, further accessories, further environmental standards etc.

Extended Temperature range: -25…+60°C

Supported Standards:

- CE
- EN61000-6-1, EN61000-6-2, EN55011
- IP65

Subject to changes without notice © Copyright 2019 by SOLIFOS AG – THE INFORMATION CONTAINED IN THIS DOCUMENT IS THE SOLE PROPERTY OF SOLIFOS AG. ANY REPRODUCTION IN PART OR AS A WHOLE WITHOUT THE PERMISSION OF SOLIFOS AG IS PROHIBITED.

SOLIFOS AG
Solifos AG • Suessbachareal 1 • 5210 Windisch • Switzerland
Phone +41 56 461 8000 • contact@solifos.com

Solifos AG **Switzerland**
5210 Windisch
Klosterzelgstrasse 41
Tel: +41 56 461 80 00
contact@solifos.com

Solifos Deutschland GmbH **Germany**
53121 Bonn
Justus-von-Liebig Strasse 18
Tel: +49 170 7409987
contact.de@solifos.com

www.solifos.com

Einsatzbereite

Blitzschutz-Lösungen

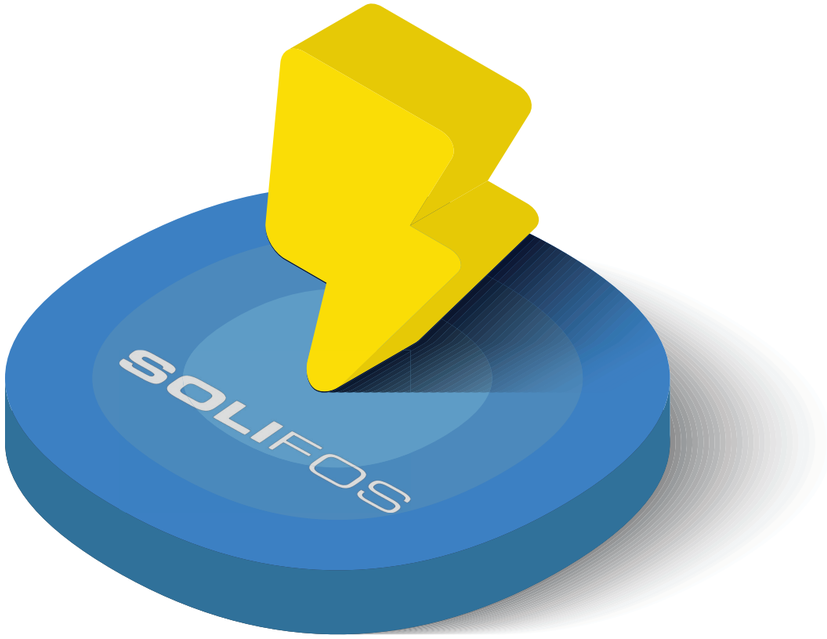

SOLIFOS
FIBER OPTIC SYSTEMS

Blitzschnell aufgebaut, bestens geschützt

Als Betreiber einer Feldinstallation sind Sie stets für die Sicherheit ihres Teams verantwortlich. So auch im Falle eines Gewitters mit Blitzschlag. Da es bis dato keine adäquate Lösung zum Schutz von Personal und Material am Feld gab, wurde diese Tatsache oft und gerne ignoriert.

Als Besitzer des Patentes für ein kompaktes, jederzeit einsetzbares Blitzschutzsystem schafft Solifos nun Abhilfe. Mit der Installation der besonders leichten und kosteneffizienten Lösung wird die Gefahr eines Blitzeinschlags im Lager oder auf im Freien gelagertes Material gebannt.

Anwendungen

Effektiver Blitzschutz für:
- Militärlager und Depots
- Veranstaltungen im Freien (Sport, Konzerte, Theater, Public Viewing, Kino...)

Die Vorteile

ZESP mit Überspannungsschutzgeräten für verschiedene Signale
- Leicht zu transportieren, geringer Platzbedarf, geringes Gewicht
- Einfacher und schneller Einsatz, ergonomische Handhabung
- Modular und skalierbar, anpassbar an die Größe des zu schützenden Bereichs
- Um Personen und Geräte vor Überspannungen zu schützen, werden alle elektrisch leitenden Kabel über Blitzschutz-Elemente (Blitz- und Überspannungsschutz) in einen geschützten Bereich eingeleitet. Blitzschutz-Elemente sind für eine Vielzahl von Signalen erhältlich
- Schulungen werden vor Ort oder in Windisch angeboten

Produkte und Service

Große Auswahl an verschiedenen LEMP-Schutzprodukten und -Systemen
- Blitzfangmasten
- Blitzschutzkabel
- Erdungsstangen
- Zubehör für Aufstellung und Anschluss
- ZESP und Überspannungsschutzgeräte

Service
- Ausführliche Prüfung der zu schützenden Geräte
- Beratung zur Lösung
- Technische Planung
- Installationsschulung und Empfehlungen

Beschreibung

- Blitzableiter gegen direkte Einschläge
- Potentialausgleichszone gegen Schrittspannung
- Kombination aus beiden Methoden für optimalen Schutz

Installation der Masten und der Kabel für den Spannungs-Fänger
Je nach Fläche muss eine bestimmte Anzahl von Fangstangen platziert und durch ein Fangkabel verbunden werden: Einzelne Objekte werden mit zwei Stangen und einem Kabel gesichert. Für größere Gebiete wird ein Netz aus Stangen und Kabeln aufgebaut. Höhe der Masten und Abstand zwischen Stangen und Kabeln sind dabei maßgeblich für einen effektiven Schutz.

Installation der Erdungs- und Potentialausgleichsinsel
Die Schrittspannung ist eine potenziell tödliche Spannung, die durch einen Blitzeinschlag in den Boden verursacht wird. Die Gefährlichkeit der Schrittspannung ist abhängig vom Abstand zwischen der Blitzeinschlagstelle und den Beinen sowie dem Abstand zwischen den Beinen einer Person (oder eines Tieres). Sie kann durch einen geeigneten Erdungsring um das Lager eliminiert werden. Dieser wird durch ein Erdungskabel und Erdungsstäben geformt.

Einführung von leitenden Kabeln in den geschützten Bereich
Alle leitfähigen Kabel, die von außen in den geschützten Bereich eingeführt werden sollen, passieren Überspannungsschutzgeräte, die den Eintrittspunkt (ZESP) nutzen. Dazu gehören Strom-, Daten- und Telefonleitungen sowie Funk-Koaxialkabel.

Koordinierung und Dimensionierung
All diese Maßnahmen müssen koordiniert und in einem gemeinsamen System verbunden werden. Solifos bietet den passenden Aufbau für Ihre Installation.

Umgebungsbedingungen
Standard-Betriebstemperaturbereich: -20°C ... +49°C
Erweiterter Betriebstemperaturbereich auf Anfrage

SOLIFOS FIBER OPTIC SYSTEMS

BRUMIL 240 – EMP Protector Phone wires (POTS, ISDN and xDSL)

The efficient devices to protect equipment against the effects of EMP (Electromagnetic Pulses)

- **Combined Lightning and HEMP and IEMI-Protection for two independent wire pairs of a telephone line**
- **Protects phone connections for POTS, ISDN, xDSL (ADSL, VDSL, etc.)**
- **Combination of non-linear high surge current components and linear filter components**
- **Metallic case for installation directly into shielding wall (Single Point Entry) as feed-through filter**
- **WAGO® picoMax® on both sides provide easy installation**
- **Tested with injected HEMP-pulses E1 (short time) and E2 (intermediate time) according to MIL-STD-188-125**
- **Integrated locking latches provide high vibration resistance up to 20g**
- **High quality components make this a very reliable and long-life product**

Description:

- The BRUMIL 240 Surge Protection Device is a combined surge protection device which protects reliably against various transient overvoltages (such as lightning and HEMP) and simultaneously filters high frequency disturbances.
- Transient overvoltages in wiring can be generated by various disturbances: switching transients, lightning surges, electrostatic discharge (ESD) or HEMP (High-altitude Electromagnetic Pulse). HEMP is created by a nuclear explosion outside of the atmosphere. Often the general term EMP (Electromagnetic Pulse) is used, or NEMP (Nuclear Electromagnetic Pulse), or LEMP (for Lightning EMP). HPEM (high power electromagnetic) considers all kinds of high power transients, including IEMI-disturbances (Intentional Electro Magnetic Interference).
- The BRUMIL 240 Surge Protection Device consists of several well-coordinated protection stages, which reliably and effectively protect sensitive electronics against all kinds of HPEM disturbances.

Applications:

- The BRUMIL 240 is designed to safely protect two independent wire pairs of telephone lines against transient overvoltages caused by lightning, HEMP or IEMI. EMP-422920 is designed to work with POTS (plain old telephone system) as well as with DSL (Digital Subscriber Lines) using a bandwidth up to 30MHz.
- HEMP-Filters are high-frequency components and shall be installed accordingly for best performance. An installation as feed-through filter directly into a shielding wall results in best protection performance. Over voltages and interference currents will flow to the shielding wall and electronic equipment in the shielded room is well protected.
- Please make sure, that all wires entering a protected volume have to be protected accordingly. This will reliably protect even commercial of the shelf (COTS) electronics of critical infrastructure.

Dimensions:

- Total length: 167mm (without patch cable)
- Diameter: M32x1.5mm thread

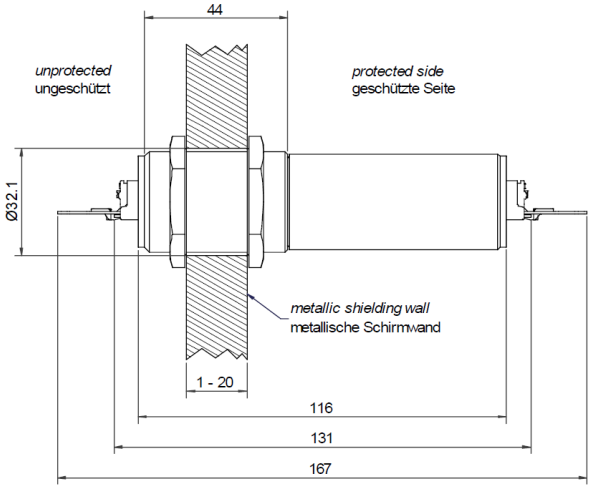

© Copyright 2018 by BSolifos AG – THE INFORMATION CONTAINED IN THIS DOCUMENT IS THE SOLE PROPERTY OF BRUGG KABEL AG.
ANY REPRODUCTION IN PART OR AS A WHOLE WITHOUT THE PERMISSION OF BRUGG KABEL AG IS PROHIBITED.

Subject to changes without notice

SOLIFOS FIBER OPTIC SYSTEMS
Solifos AG
Phone +41 56 461 8000 • www.solifos.com • contact@solifos.com

BRUMIL 240 – EMP Protector Phone wires		
Application	2 telephone wires	Max. 160V/ max. 500mA; connection pin for shield
Bandwidth	DC-30MHz	For analog / digital telephone cables (POTS, ISDN, xDSL)
Pin 1	1a	Wire pair 1
PIN 2	1b	Wire pair 1 return
PIN 3	Connection for shield	Internally connected to ground/case on both sides
PIN 4	2a	Wire pair 2
PIN 5	2b	Wire pair 2 return
Max. lightning surge current (Imax)	10 kA	Each wire → ground, shape 8/20 µs, at least 1 pulse
Max. Lightning impulse current (IIMP)	2kA	Each wire → ground, shape 10/350 µs, at least 1 pulse
Residual Voltage Surge	<250V	Each wire → ground, Impulse 4 kV / 2 kA acc. IEC 61000-4-5
Residual Voltage HEMP E1 to single wire	<200V	At 50 Ohms → ground; E1 (early-time) acc. MIL-STD-188-125
Residual Voltage HEMP E2 to single wire	<200V	At 1MOhms → ground; E2 (intermediate-time) MIL-STD-188-125
Connection	5-pins, max 1.5mm2	WAGO® picoMAX® 3.5, pluggable and locked cage-clamp connection
Case Material	AISI 304	Stainless, EMC-locknuts nickel-plated brass
Max Intallation Torque	20Nm	Metric fine thread M32x1.5
Dimensions	Ø 32 x 167mm	Major dimensions, see drawing for details
Installation hole	Ø 32.5mm	Installation by 2 EMC-locknuts (included)
Weight	appr. 300g	

© Copyright 2018 by BSolifos AG – THE INFORMATION CONTAINED IN THIS DOCUMENT IS THE SOLE PROPERTY OF BRUGG KABEL AG.
ANY REPRODUCTION IN PART OR AS A WHOLE WITHOUT THE PERMISSION OF BRUGG KABEL AG IS PROHIBITED.

Subject to changes without notice

SOLIFOS FIBER OPTIC SYSTEMS
Solifos AG
Phone +41 56 461 8000 • www.solifos.com • contact@solifos.com

BRUMIL 250 – EMP Protector signal wires

The efficient devices to protect equipment against the effects of EMP (Electromagnetic Pulses)

- **Combined Lightning and HEMP and IEMI-Protection for four individual wires, carrying up to 32V/0.5A**
- **Protects four individual wires, has connection pin for shield**
- **Combination of non-linear high surge current components and linear filter components**
- **Metallic case for installation directly into shielding wall (Single Point Entry) as feed-through filter**
- **WAGO® picoMax® on both sides provide easy installation**
- **Tested with injected HEMP-pulses E1 (short time) and E2 (intermediate time) according to MIL-STD-188-125**
- **Integrated locking latches provide high vibration resistance up to 20g**
- **High quality components make this a very reliable and long-life product**

Description:

- The BRUMIL 250 Surge Protection Device is a combined surge protection device which protects reliably against various transient overvoltages (such as lightning and HEMP) and simultaneously filters high frequency disturbances.
- Transient overvoltages in wiring can be generated by various disturbances: switching transients, lightning surges, electrostatic discharge (ESD) or HEMP (High-altitude Electromagnetic Pulse). HEMP is created by a nuclear explosion outside of the atmosphere. Often the general term EMP (Electromagnetic Pulse) is used, or NEMP (Nuclear Electromagnetic Pulse), or LEMP (for Lightning EMP). HPEM (high power electromagnetic) considers all kinds of high power transients, including IEMI-disturbances (Intentional Electro Magnetic Interference).
- The BRUMIL 250 Surge Protection Device consists of several well-coordinated protection stages, which reliably and effectively protect sensitive electronics against all kinds of HPEM disturbances.

Applications:

- The BRUMIL 250 is designed to safely protect four individual wires with operating voltages up to 32V and operating currents up to 500mA against transient overvoltages caused by lightning, HEMP or IEMI. EMP-422920 is designed to work with POTS (plain old telephone system) as well as with DSL (Digital Subscriber Lines) using a bandwidth up to 30MHz.
- HEMP-Filters are high-frequency components and shall be installed accordingly for best performance. An installation as feed-through filter directly into a shielding wall results in best protection performance. Over voltages and interference currents will flow to the shielding wall and electronic equipment in the shielded room is well protected.
- Please make sure, that all wires entering a protected volume have to be protected accordingly. This will reliably protect even commercial of the shelf (COTS) electronics of critical infrastructure.

Dimensions:

- Total length: 167mm (without patch cable)
- Diameter: M32x1.5mm thread

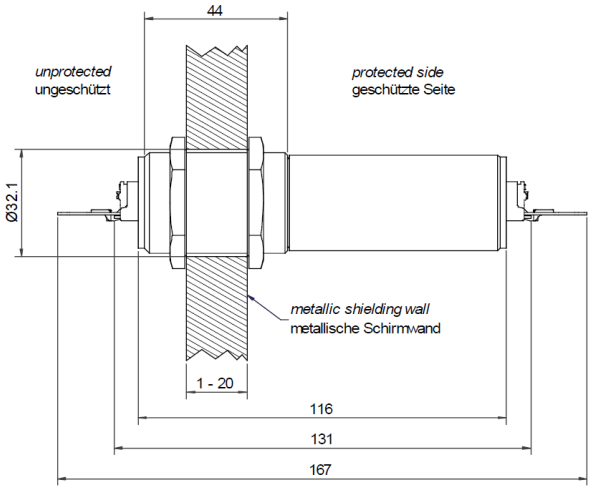

© Copyright 2018 by BSolifos AG – THE INFORMATION CONTAINED IN THIS DOCUMENT IS THE SOLE PROPERTY OF BRUGG KABEL AG.
ANY REPRODUCTION IN PART OR AS A WHOLE WITHOUT THE PERMISSION OF BRUGG KABEL AG IS PROHIBITED.

Subject to changes without notice

SOLIFOS FIBER OPTIC SYSTEMS
Solifos AG
Phone +41 56 461 8000 • www.solifos.com • contact@solifos.com

BRUMIL 250 – EMP Protector Phone wires		
Application	4 single wires	Max. 32V/ max. 500mA; connection pin for shield
Bandwidth	DC-100kHz/ 19200 BAUD	For signal or control wires
Pin 1	1a	Wire pair 1, max. 32V (to pin 2 or ground)
PIN 2	1b	Return conductor of wire pair 1
PIN 3	Connection for shield	Internally connected to ground/case on both sides
PIN 4	2a	Wire pair 2, max. 32V (to pin 2 or ground)
PIN 5	2b	Return conductor of wire pair 2
Max. lightning surge current (Imax)	10 kA	Each wire → ground, shape 8/20 µs, at least 1 pulse
Max. Lightning impulse current (IIMP)	2kA	Each wire → ground, shape 10/350 µs, at least 1 pulse
Residual Voltage Surge	<45V	Each wire → ground, Impulse 4 kV / 2 kA acc. IEC 61000-4-5
Residual Voltage HEMP E1 to single wire	<35V	At 50 Ohms → ground; E1 (early-time) acc. MIL-STD-188-125
Residual Voltage HEMP E2 to single wire	<45V	At 1MOhms → ground; E2 (intermediate-time) MIL-STD-188-125
Connection	5-pins, max 1.5mm2	WAGO® picoMAX® 3.5, pluggable and locked cage-clamp connection
Case Material	AISI 304	Stainless, EMC-locknuts nickel-plated brass
Max Intallation Torque	20Nm	Metric fine thread M32x1.5
Dimensions	Ø 32 x 167mm	Major dimensions, see drawing for details
Installation hole	Ø 32.5mm	Installation by 2 EMC-locknuts (included)
Weight	appr. 300g	

© Copyright 2018 by BSolifos AG – THE INFORMATION CONTAINED IN THIS DOCUMENT IS THE SOLE PROPERTY OF BRUGG KABEL AG.
ANY REPRODUCTION IN PART OR AS A WHOLE WITHOUT THE PERMISSION OF BRUGG KABEL AG IS PROHIBITED.

Subject to changes without notice

SOLIFOS FIBER OPTIC SYSTEMS
Solifos AG
Phone +41 56 461 8000 • www.solifos.com • contact@solifos.com

BRUMIL 260 – Surge Protector coaxial cables 50Ω

The efficient devices to protect equipment against the effects of surges

- **Surge protection for coaxial cables**
- **Small insertion loss (0.2dB) from DC to 5.8Ghz**
- **DC up to 12V for remote power applications**
- **N-connector (female) on unprotected side**
- **N-connector (male) on protected side**
- **Compact feed-through design (bulkhead) for direct installation to shielding wall**

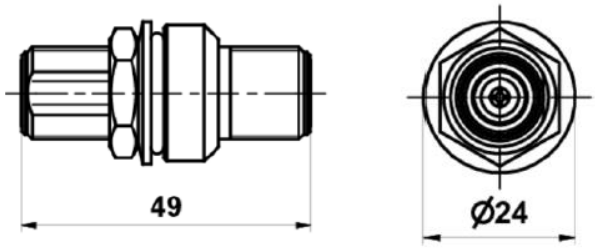

PRELIMINARY

Description:

- BRUMIL 260 is a coaxial protection offering a very high passband from DC to 5.8GHz having less than 0.2dB insertion loss.
- DC-transmission for remote power is also possible, however, the DC-power should automatically be switched off in case of a short-circuit.

Applications:

- The BRUMIL 260 is designed to protect a coaxial cable with N-type connectors carrying RF-signals up to 50W power and frequencies up to 5.8GHz. It has a bulkhead design, which permits the installation into a shielding wall as a feed-through protector. Together with other protectors it forms a “single point of entry” to protect sensitive equipment.
- BRUMIL 260can also transmit DC-power for remote power supply of antenna systems. The DC-power supply shall be short-circuit proof and shall switch off power when short-circuited

Dimensions:

- Total length: 49mm (without patch cable)
- Diameter: 24mm thread

© Copyright 2018 by BSolifos AG – THE INFORMATION CONTAINED IN THIS DOCUMENT IS THE SOLE PROPERTY OF BRUGG KABEL AG.
ANY REPRODUCTION IN PART OR AS A WHOLE WITHOUT THE PERMISSION OF BRUGG KABEL AG IS PROHIBITED.

Subject to changes without notice

SOLIFOS FIBER OPTIC SYSTEMS
Solifos AG
Phone +41 56 461 8000 • www.solifos.com • contact@solifos.com

BRUMIL 260 – Surge Protector coaxial cables		
Application	Coaxial protection	50 Ohms cables
Passband	DC – 5.8GHz	Up to 12VDC/3A for remote power (short-circuit proof)
Max. RF power	50 W	
Max. DC-current	3A	Permanent, power supply must interrupt in case short-circuit
Insertion loss	<0.2dB	DC – 5.8GHz, 50 Ohms system
Return loss	>20dB	
Nominal surge current I_n	5kA	Pulse shape 8/20µs
Max. discharge current I_{max}	10kA	Pulse shape 8/20µs
Max. lightning current I_{Imp}	1 kA	Pulse shape 10/350µs
Connector type unprotected side	N (female) 50 Ohm	
Connector type protected side	N (male) 50 Ohm	
Weight	Appr. 100g	

© Copyright 2018 by BSolifos AG – THE INFORMATION CONTAINED IN THIS DOCUMENT IS THE SOLE PROPERTY OF BRUGG KABEL AG.
ANY REPRODUCTION IN PART OR AS A WHOLE WITHOUT THE PERMISSION OF BRUGG KABEL AG IS PROHIBITED.

Subject to changes without notice

SOLIFOS FIBER OPTIC SYSTEMS
Solifos AG
Phone +41 56 461 8000 • www.solifos.com • contact@solifos.com

BRUMIL 220– EMP Protector RJ45-1000 Mbit/s

The efficient devices to protect equipment against the effects of EMP (Electromagnetic Pulses)

- **Combined Lightning and HEMP and IEMI-Protection for all four wire pairs of an Ethernet cable, not for PoE**
- **Protects Ethernet connection for 10 /100/1000 Mbit/s**
- **Combination of non-linear high surge current components and linear filter components.**
- **Galvanic insulation between protected and unprotected side results in low protection levels.**
- **Metallic case for installation directly into shielding wall (Single Point Entry) as feed-through filter**
- **RJ45 jackets on both ends make installation easy**
- **Designed to protect against short-time and inter-mediate-time threats as defined in MIL-STD-188-125**
- **High quality components make this a very reliable and long-life product**

Description:

- The BRUMIL 220 Surge Protection Device is a combined surge protection device which protects reliably against various transient overvoltages (such as lightning and HEMP) and simultaneously filters high frequency disturbances.
- Transient overvoltages in wiring can be generated by various disturbances: switching transients, lightning surges, electrostatic discharge (ESD) or HEMP (High-altitude Electromagnetic Pulse). HEMP is created by a nuclear explosion outside of the atmosphere. Often the general term EMP (Electromagnetic Pulse) is used, or NEMP (Nuclear Electromagnetic Pulse), or LEMP (for Lightning EMP). HPEM (high power electromagnetic) considers all kinds of high power transients, including IEMI-disturbances (Intentional Electro Magnetic Interference).
- The BRUMIL 220 Surge Protection Device consists of several well-coordinated protection stages, which reliably and effectively protect sensitive electronics against all kinds of HPEM disturbances.
- The BRUMIL 220 EMP Protector RJ45-1000 is threat-level tested against EMP according to **MIL-STD-188-125**, short pulse and intermediate pulse

Applications:

- The BRUMIL 220 is designed to safely protect Ethernet equipment and cabling with data rates of 10/100/1000 Mbit/s against transient over voltages caused by lightning, HEMP or IEMI. This version cannot be used in applications with PoE or PoE+ (Power over Ethernet). A special protection design results in very low residual voltages, which are low enough to protect any commercial of the shelf equipment from damage.
- HEMP-Filters are high-frequency components and shall be installed accordingly for best performance. An installation as feed-through filter directly into a shielding wall results in best protection performance. Over voltages and interference currents will flow to the shielding wall and electronic equipment in the shielded room is well protected.
- Please make sure, that all wires entering a protected volume have to be protected accordingly. Doing so reliably protects even commercial of the shelf (COTS) electronics of critical infrastructure.

Dimensions:

- Total length: 118mm (without patch cable)
- Diameter: M32x1.5mm thread

BRUMIL 220 – EMP Protector RJ45-1000		
Max. operating voltage peak signal	±2V	Voltage between wire pairs 1-2, 3-6, wire pair 4-5 and 7-8
Data rate	10/100/1000 Mbit/s	Ethernet, Fast Ethernet Gigabit-Ethernet as per IEEE 802.3
Max. surge current I_{Max}	10 kA *)	Each wire to ground/case, shape 8/20 µs, at least 1 pulse
Max. lightning impulse current I_{Imp}	2 kA *)	Each wire to ground/case, shape 10/350 µs, at least 1 pulse
DC resistance input – output	Open circuit	Input / output isolated > 500VDC
Residual voltage common mode	< 20 V	Pair to ground/case, pulse 4kV/2kA according to IEC61000-4-5
Residual voltage differential mode	< 20 V	Between pair, pulse 4kV /2kA according to IEC61000-4-5
Connection terminals	RJ45 shielded	Use of shielded cables recommended
Case material	Metal	Stainless steel, EMC-Locknuts brass nickel plated
Max. allowed installation torque	20Nm	Not to be exceeded under all circumstances
Dimensions	Ø 32x118mm	2 nuts M32x1.5 for feed-through installation
Weight	Approx. 290g	Incl. 2 nuts

*) Surge current > 2kA (8/20 µs) per wire may damage RJ45 contacts

© Copyright 2018 by BSolifos AG – THE INFORMATION CONTAINED IN THIS DOCUMENT IS THE SOLE PROPERTY OF BRUGG KABEL AG.
ANY REPRODUCTION IN PART OR AS A WHOLE WITHOUT THE PERMISSION OF BRUGG KABEL AG IS PROHIBITED.

Subject to changes without notice

SOLIFOS FIBER OPTIC SYSTEMS
Solifos AG
Phone +41 56 461 8000 • www.solifos.com • contact@solifos.com

BRUMIL 230 – EMP Protector RJ45-1000 Mbit/s including PoE+

The efficient devices to protect equipment against the effects of EMP (Electromagnetic Pulses)

- **Combined Lightning and HEMP and IEMI-Protection for all four wire pairs of an Ethernet cable, works also with PoE+ (up to 60 Watts)**
- **Protects Ethernet connection for 10 /100/1000 Mbit/s**
- **Combination of non-linear high surge current components and linear filter components provide low protection levels.**
- **Metallic case for installation directly into shielding wall (Single Point Entry) as feed-through filter**
- **RJ45 jackets on both ends make installation easy**
- **Designed to protect against short-time and inter-mediate-time threats as defined in MIL-STD-188-125**
- **High quality components make this a very reliable and long-life product**

Description:

- The BRUMIL 230 Surge Protection Device is a combined surge protection device which protects reliably against various transient overvoltages (such as lightning and HEMP) and simultaneously filters high frequency disturbances.
- Transient overvoltages in wiring can be generated by various disturbances: switching transients, lightning surges, electrostatic discharge (ESD) or HEMP (High-altitude Electromagnetic Pulse). HEMP is created by a nuclear explosion outside of the atmosphere. Often the general term EMP (Electromagnetic Pulse) is used, or NEMP (Nuclear Electromagnetic Pulse), or LEMP (for Lightning EMP). HPEM (high power electromagnetic) considers all kinds of high power transients, including IEMI-disturbances (Intentional Electro Magnetic Interference).
- The BRUMIL 230 Surge Protection Device consists of several well-coordinated protection stages, which reliably and effectively protect sensitive electronics against all kinds of HPEM disturbances.
- The BRUMIL 230 EMP Protector RJ45-1000 is threat-level tested against EMP according to **MIL-STD-188-125**, short pulse and intermediate pulse

Applications:

- The BRUMIL 230 is designed to safely protect Ethernet equipment and cabling with data rates of 10/100/1000 Mbit/s and superimposed PoE+ power supply (Power over Ethernet plus) according to IEEE 802.3at against transient over voltages caused by lightning, HEMP or IEMI. A special protection design results in very low residual voltages, which are low enough to protect any commercial of the shelf equipment from damage.
- HEMP-Filters are high-frequency components and shall be installed accordingly for best performance. An installation as feed-through filter directly into a shielding wall results in best protection performance. Over voltages and interference currents will flow to the shielding wall and electronic equipment in the shielded room is well protected.
- Please make sure, that all wires entering a protected volume have to be protected accordingly. This will reliably protect even commercial of the shelf (COTS) electronics of critical infrastructure.

Dimensions:

- Total length: 118mm (without patch cable)
- Diameter: M32x1.5mm thread

BRUMIL 230 – EMP Protector RJ45-1000 PoE+		
Max. operating voltage peak signal	±2V	Voltage between wire pairs 1-2, 3-6, wire pair 4-5 and 7-8
Max DC-power transmission	60W	PoE+ supply according to IEEE 802.3at using all 4 wire pairs
Data rate	10/100/1000 Mbit/s	Ethernet, Fast Ethernet Gb/s-Ethernte as per IEEE 802.3
Max. surge current I_{Max}	10 kA *)	Each wire to ground/case, shape 8/20 µs, at least 1 pulse
Max. lightning impulse current I_{Imp}	2 kA *)	Each wire to ground/case, shape 10/350 µs, at least 1 pulse
DC resistance input – output	<3 Ohm	Each wire pair
Residual voltage common mode	< 100 V	Pair to ground/case, pulse 4kV/2kA according to IEC61000-4-5
Residual voltage differential mode	< 100 V	Between pair, pulse 4kV /2kA according to IEC61000-4-5
Connection terminals both ends	RJ45 shielded	Use of shielded cables recommended
Case material	Metal	Stainless steel, EMC-Locknuts brass nickel plated
Max. allowed installation torque	20Nm	Not to be exceeded under all circumstances
Dimensions	Ø 32x118mm	2 nuts M32x1.5 for feed-through installation
Weight	Approx. 300g	Incl. 2 EMC-Locknuts

*) Surge current > 2kA (8/20 µs) per wire may damage RJ45 contacts

© Copyright 2018 by BSolifos AG – THE INFORMATION CONTAINED IN THIS DOCUMENT IS THE SOLE PROPERTY OF BRUGG KABEL AG.
ANY REPRODUCTION IN PART OR AS A WHOLE WITHOUT THE PERMISSION OF BRUGG KABEL AG IS PROHIBITED.

Subject to changes without notice

SOLIFOS FIBER OPTIC SYSTEMS
Solifos AG
Phone +41 56 461 8000 • www.solifos.com • contact@solifos.com

Centralized Power Distributor and Surge Protector (ZESP)

The ZESP is part of an overall concept to protect communication equipment from the effects of lightning. It is the centralized protection point for power distribution and grounding of communication systems in an open area, with various unprotected power- and communication inputs, which are protected against overload voltages resulting from lightning and then distributed as protected outputs to the communication equipment.

Description:

The ZESP is a custom specific system solution. The given technical data are for reference purpose only. Similar systems can be engineered according to customer's needs.
The ZESP is part of an overall concept to protect communication equipment as well as personnel from lightning effects in a open area, e.g. in a tent. The ZESP is the central power- and grounding point of a communication infrastructure and protects all inputs, power and communication connectors with surge protection against over voltages resulting from the effects of lightning, prior to connecting them to the communication equipment.
The realized surge protection units ZESP consists of a front panel with sockets to connect the cables from the unprotected side, like a socket for a three phases power connection 400 VAC, a single phase socket 230 VAC and a power switch. For communication there are two coaxial connectors for satellite antennas, two Ethernet RJ-45 connectors and 10 pairs of two wire analogue telephone connections available. Two grounding screws are available on the metal housing and local grounding can be fixed on, to the other metallic cables, e.g. optical metallic cables can be grounded.
Type 1 protection devices are used for lightning protection at the crossover from lightning protection zone 0 to zone 1. The surge protection devices for the power are thermal supervised and the status signalized with LED's.
On the back panel the protected sockets for connecting the communication equipment are available. By this method a strict separation of unprotected inputs and protected output is realized. All connections are surge protected and grounded with the same potential, to one ZESP housing.

Front panel

Back panel

Construction:
MIL-housing 19" with shock absorbing and dust-and watertight front – and back wall cover IP 67.

Connectors:
- 2x RJ-45 Ethernet 100BaseT
- 2x connectors for satellite receiver
- 10x analogue telephone clamps
- 1x power 3L, N, PE, 400VAC 32A
- 1x power 1L, N, PE 230VAC 16A
- overload protection
- earth leakage circuit breaker
- LED's for operation and power

Applications:
- Surge protection for data and power lines, which are free deployed (in or over the ground).
- Other customized solutions are possible.
- Belongs to the system solutions family BRUGG MILLE.

Technical data:
Surge protection power:
- Discharge capacity Class I+II
- I_{imp} = 20kA (L>N), I_{max} = 150kA
- I_{imp} = 80kA (N>PE)
- U_C = 275 VAC
- Electric power system: TN-S
- LED's for operation and power

Surge protection telephone:
- Telephone line pairs 10Mbit/s
- Category Class I+II tested acc. to IEC61643-21:2000, A2,B2,C2,C3,D1
- I_{max} = 2x10kA (8/20µs)
- U_N = 170V
- 600 Ohm, 2-wire, 3 kHz

Ethernet connection RJ-45:
- Category Class I+II tested acc. to IEC61643-21:2000, A2,B2,C2,C3,D1
- I_{max} = 10kA (8/20µs)
- RJ-45 connector max. 2.5 kA
- U_N = 170V
- Cat. 5, 4 pairs protected
- Ethernet 10/100BaseT, optional: PoE

Satellit 75 Ohm (F-connector):
- Category Class I+II tested acc. to IEC61643-21:2000, A2,B2,C2,C3,D1
- Band width 0-2GHz
- I_{max} =10kA (8/20µs)
- U_N = 72V

Temperature range:
- Operation -40º...+70º C MIL-STD-810F-501.4
- Storage -60º...+85º C MIL-STD-810F-502.4

Environmental conditions:
- Immersion protection IP67 with inserted connectors or screwed protection caps MIL-STD-810F-512.4

Dimensions:
- 19", 6 units high
- Weight approx. 15 kg

© Copyright 2020 by Solifos AG – THE INFORMATION CONTAINED IN THIS DOCUMENT IS THE SOLE PROPERTY OF SOLIFOS AG.
ANY REPRODUCTION IN PART OR AS A WHOLE WITHOUT THE PERMISSION OF SOLIFOS AG IS PROHIBITED.
Subject to changes without notice

SOLIFOS FIBER OPTIC SYSTEMS
Solifos AG
Phone +41 56 461 8000 • www.solifos.com • contact@solifos.com